SOUTHERN IRRIGATION
Intelligent Water Solutions

VR4 - 100X390

OCMIS

FEATURES

- VarioRain Transmission
- Speed compensation
- Hose cart flushout
- All galvanized frame & 4-wheel guncart
- Galvanized Reel
- Non-rusting aluminum elbow entering machine
- Triple gaskets on inlet elbow
- Crossover hose hook-up to either side of machine
- Guncart Lift
- Emergency PTO rewind capability
- Direct speed readout
- Manual hydraulic stabilizer legs
- 20 feet of supply hose
- Ball & socket quick connects
- Fully adjustable guncart
- Adjustable part circle sprinkler gun
- Direct gear drive systems- no chains
- Hydraulic rotation device
- Computer and solar panel

OPTIONS

- Watering boom
- Blow out compressor
- Rewind by engine
- Engine Hydraulics

DIMENSIONS

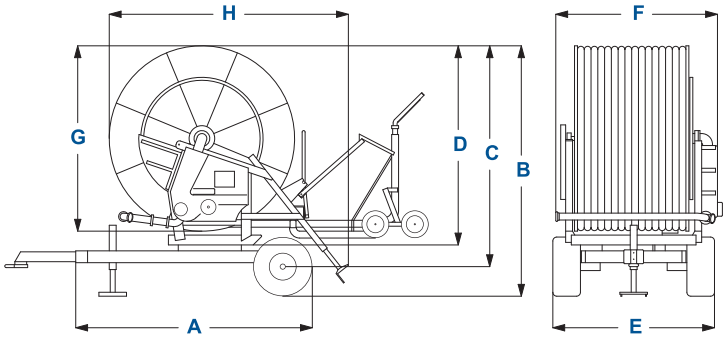

A cm	A. *inch*	B cm.	B *inch*	C cm	C *inch*	D cm	D *inch*
334	*131.5*	327	*128.7*	289	*113.8*	270	*106.3*
E cm	**E *inch***	**F cm**	**F *inch***	**G cm**	**G *inch***	**H cm**	**I *inch***
224	*88.2*	232	*88.2*	246	*96.9*	315	*124.0*

SPECIFICATIONS

- 1280 feet, 3.3" i.d. hose (100x390)
- Sime-Reflex -- 24/26/28mm nozzles
- Weight -- 6,400 lbs.
- Turbine Drive

PERFORMANCE SUMMARY

FLOW RATE GPM	INLET PRESS. (psi)	SPRINKLER PRESS. (psi)	WIDTH 80% FEET
160	85	60	215
215	110	70	250
250	120	70	270
350	160	75	300

Performance Chart

VR4 100x390 PERFORMANCE CHART

SPRINKLER		SPRINKLER	RECOMENDED	WATER DELIVER		AREA	inch OF RAIN ON IRRIGATED STRIP AND RECOMENDED PRESSURE AT THE MACHINE																	
nozzle		THROW	STRIP 80%	gallon	gallon	POSITION	0,394	inch	0,591	inch	0,788	inch	0,985	inch	1,182	inch	1,379	inch	1,576	inch	1,97	inch	2,364	inch
	psi	feet	feet	MIN.	HOUR	ACRES	feet	psi	feet	psi	feet	psi	feet	psi	feet	psi	feet	psi	feet	psi	feet	psi	feet	psi
mm																								
22	44	121	194	138	8.268	5,95	174	74	116	71	87	70	69	68	58	68	50	67	43	67	35	67	29	67
0,9	58	135	215	159	9.567	6,66	181	93	121	90	91	89	72	87	60	87	52	86	45	86	36	86	30	86
inch	65	143	228	169	10.153	7,11	181	103	121	100	91	98	73	97	60	97	52	95	45	95	36	95	30	95
	73	148	236	178	10.708	7,38	185	112	123	109	92	108	74	106	62	106	53	105	46	105	37	105	31	105
	80	156	249	187	11.215	7,84	183	122	122	119	92	117	73	116	61	116	52	114	46	114	37	114	31	114
recommended gear speed							**3**		**3**		**2**		**2**		**2**		**2**		**1**		**1**		**1**	
mm	44	128	205	164	9.868	6,31	197	80	131	77	98	75	79	74	66	74	56	73	49	73	39	73	33	73
24,0	58	144	231	190	11.405	7,20	201	101	134	98	101	96	81	95	67	95	58	93	50	93	40	93	34	93
inch	65	151	241	202	12.102	7,57	204	111	136	108	102	107	82	105	68	105	58	104	51	104	41	104	34	104
0,9	73	157	252	213	12.767	7,93	207	121	138	118	103	117	83	115	69	115	59	114	52	114	41	114	34	114
	80	161	257	223	13.369	8,12	212	131	141	128	106	127	85	126	71	126	61	124	53	124	42	124	35	124
recommended gear speed							**3**		**3**		**2**		**2**		**2**		**2**		**1**		**1**		**1**	
mm	44	135	215	193	11.595	6,66	220	87	146	84	110	83	88	81	73	81	63	80	55	80	44	80	37	80
26,0	58	151	241	223	13.401	7,57	226	110	151	107	113	105	91	104	75	104	65	103	57	103	45	103	38	103
inch	65	157	252	237	14.224	7,93	230	121	153	118	115	117	92	115	77	115	66	114	58	114	46	114	38	114
1,0	73	167	268	250	14.985	8,49	228	132	152	129	114	128	91	127	76	127	65	125	57	125	46	125	38	125
	80	171	273	262	15.713	8,68	235	143	156	141	117	139	94	138	78	138	67	136	59	136	47	136	39	136
recommended gear speed							**4**		**3**		**3**		**2**		**2**		**2**		**2**		**1**		**1**	
mm	44	144	231	224	13.432	7,20	237	95	158	93	119	91	95	90	79	90	68	88	59	88	47	88	40	88
28,0	58	157	252	259	15.539	7,93	251	121	168	118	126	116	101	115	84	115	72	114	63	114	50	114	42	114
inch	65	164	262	275	16.474	8,30	256	133	171	130	128	129	102	127	85	127	73	126	64	126	51	126	43	126
1,1	73	171	273	289	17.361	8,68	259	146	173	143	130	141	104	140	86	140	74	138	65	138	52	138	43	138
	80	176	281	303	18.200	8,96	264	158	176	155	132	154	106	152	88	152	75	151	66	151	53	151	44	151
recommended gear speed							**4**		**3**		**3**		**2**		**2**		**2**		**2**		**1**		**1**	

These tables are merely indicative because they have been worked out through mathematical formula and according to average working conditions .
Consequently Ocmis declines any responsabilites deriving from their application.

Drum
Engineered for compactness. Painted with epoxy primer and polyurethane compound paint using vanguard techniques.

PE Hose
Top quality PE hose manufactured to resist very heavy drags and very high working pressures.

Frame:
The chassis is made of bolted sections, composed of strong steel beams electronically welded by robots and hot dipped galvanized.

Gun Stand:
Gun stand available in 2-wheel, 4-wheel or 5-wheel versions according to model. Special versions available to accommodate the most varied work conditions.

Hose Guide System
A scroll bar system guarantees a perfect layering of the polyethylene hose and reduces hose wear to a minimum.

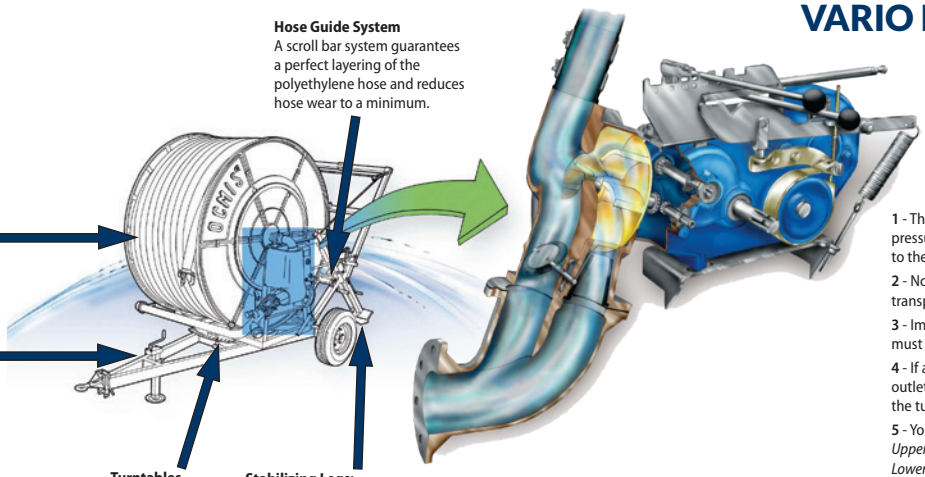

Turntables
Turntables are mounted on large diameter bearings for easy rotation.

Stabilizing Legs:
Large hydraulic or mechanical stabilizer legs assure stability to the machine in the toughest working conditions.

VARIO RAIN
pure technology

The Vario Rain Gearbox is derived from Ocmis' continued investment in R&D, resulting in a gearbox with lower pressure drops, easy to use, versatile, robust, and needing minimum maintenance.
Standard on all V-series reels.

1 - The most efficient turbine on the market-- requiring less water and pressure to run gearbox, allowing more water and pressure to flow through to the gun.

2 - No back-stop (no anti-reverse pawl) - middle position of gear lever is for transport (locks down drum). No backlash when changing speeds.

3 - Impossible to break gearbox by winding up hose with PTO; gear shift must be in correct position otherwise reel will not turn.

4 - If a rock locks up the impeller you can reverse the impeller (turning the outlet shaft next to turbine), release the rock without having to open up the turbine.

5 - You can always see what speed you are in:
Upper lever - Variable speeds: 1-2-3-4
Lower Lever - Left position: hose/cart pull-out (& PTO wind-up)
- Centre Position: drum lock down (for transport)
- Right Position: working position