SOUTHERN IRRIGATION
Intelligent Water Solutions

R1/1 - 75x250

OCMIS

FEATURES

- Turbospeed transmission
- Guncart lift
- Hose cart flushout
- Speed compensation
- Direct speed readout
- All galvanized frame & 2-wheel guncart
- Non-rusting aluminum elbow entering machine
- Triple gaskets on inlet elbow
- Crossover hose hook up to either side of machine
- Emergency PTO rewind capability
- Hydraulic stabilizer legs
- 20 feet of supply hose
- Ball & socket quick connects
- Fully adjustable guncart
- Adjustable part circle sprinkler gun
- Direct gear drive system- no chains

OPTIONS

- Watering boom
- Computer and solar panel
- Blow out compressor
- Rewind by engine

DIMENSIONS

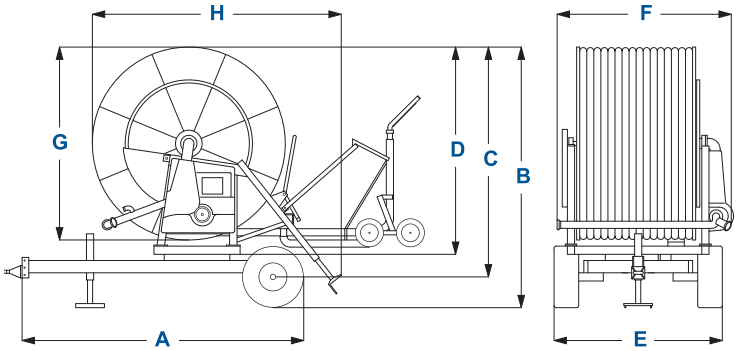

A cm	A. *inch*	B cm.	B *inch*	C cm	C *inch*	D cm	D *inch*
290	*114.2*	230	*90.6*	200	*78.8*	180	*70.9*
E cm	**E *inch***	**F cm**	**F *inch***	**G cm**	**G *inch***	**H cm**	**I *inch***
175	*68.9*	170	*66.9*	169	*66.6*	225	*88.6*

SPECIFICATIONS

- 820 feet, 2.5" i.d. hose (75x250)
- Sime-Royal gun - 16/18/20mm nozzle
- Weight -- 2,308 lbs.
- Turbine Drive

PERFORMANCE SUMMARY

FLOW RATE GPM	INLET PRESS. (psi)	SPRINKLER PRESS. (psi)	WIDTH 80% FT
75	65	45	170
120	110	70	215
150	125	70	226
180	145	70	236

Performance Chart

R1/1 75x250 PERFORMANCE CHART

nozzle		THROW	STRIP 80%	gallon	gallon	AREA	0,4	inch	0,6	inch	0,8	inch	1	inch	1,2	inch	1,4	inch	1,6	inch	2	inch	E 2,4	inch
	psi	ft/h	ft/h	MIN.	HOUR	ACRES	ft/h	psi	ft/h	psi	ft/h	psi	ft/h	psi	ft/h	psi	ft/h	psi	ft/h	psi	ft/h	psi	ft/h	psi
mm																								
16	44	105	168	73	4.372	3,44	106	68	71	66	53	65	42	63	35	63	30	63	27	63				
0,6	58	118	189	84	5.069	3,93	109	86	73	84	55	83	44	82	36	82	31	82	27	82				
inch	65	121	194	89	5.354	4,05	112	95	75	93	56	92	45	90	37	90	32	90	28	90				
	73	128	205	94	5.639	4,30	112	104	75	102	56	101	45	99	37	99	32	99	28	99				
	80	133	213	99	5.924	4,49	114	113	76	111	57	110	45	108	38	108	32	108	28	108				
recommended gear speed							**3**		**2**		**2**		**1**		**1**		**1**		**1**					
mm	44	108	173	92	5.544	3,56	130	74	87	73	65	71	52	70	43	70	37	70	33	70	26	70		
18,0	58	121	194	107	6.399	4,05	134	94	90	93	67	91	54	90	45	90	38	90	34	90	27	90		
inch	65	128	205	113	6.795	4,30	135	104	90	103	68	101	54	100	45	100	39	100	34	100	27	100		
0,7	73	135	215	119	7.160	4,56	136	114	90	112	68	111	54	110	45	110	39	110	34	110	27	110		
	80	141	226	125	7.508	4,81	136	124	90	122	68	121	54	119	45	119	39	119	34	119	27	119		
recommended gear speed							**3**		**2**		**2**		**1**		**1**		**1**		**1**		**1**			
mm	44	115	184	114	6.843	3,81	152	83	101	81	76	80	61	78	51	78	43	78	38	78	30	78	25	77
20,0	58	128	205	132	7.936	4,30	158	105	105	104	79	102	63	101	53	101	45	101	40	101	32	101	26	99
inch	65	135	215	140	8.411	4,56	159	116	106	115	80	113	64	112	53	112	46	112	40	112	32	112	27	111
0,8	73	141	226	148	8.870	4,81	160	127	107	126	80	125	64	123	53	123	46	123	40	123	32	123	27	122
	80	148	236	155	9.282	5,07	160	138	107	137	80	135	64	134	53	134	46	134	40	134	32	134	27	132
recommended gear speed							**3**		**3**		**2**		**2**		**1**		**1**		**1**		**1**		**1**	
	29	105	168	114	6.811	3,44	165	68	110	66	83	65	66	64	55	64	47	64	41	64	33	64	28	62
mm	44	121	194	138	8.268	4,05	174	93	116	92	87	91	69	89	58	89	50	89	43	89	35	89	29	88
22,0	58	135	215	159	9.567	4,56	181	119	121	118	91	116	72	115	60	115	52	115	45	115	36	115	30	113
inch	65	139	223	169	10.153	4,75	186	132	124	130	93	129	74	127	62	127	53	127	46	127	37	127	31	126
0,9	73	148	236	178	10.708	5,07	185	144	123	143	92	141	74	140	62	140	53	140	46	140	37	140	31	139
	80	154	247	187	11.215	5,33	185	157	124	155	93	154	74	152	62	152	53	152	46	152	37	152	31	151
recommended gear speed							**3**		**3**		**2**		**2**		**2**		**2**		**1**		**1**		**1**	
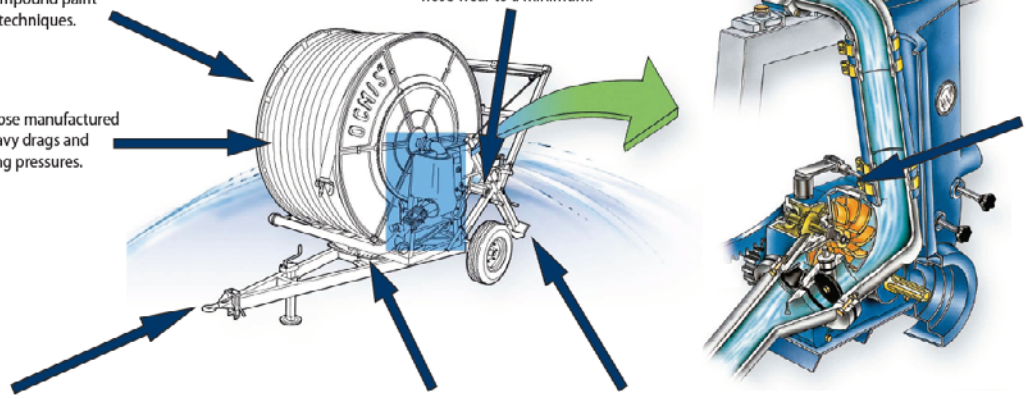
These tables are merely indicative because they have been worked out through mathematical formula and according to average working conditions .
Consequently Ocmis declines any responsabilites deriving from their application.