SOUTHERN IRRIGATION
Intelligent Water Solutions

R2/1 - 90x350

OCMIS

FEATURES

- Turbo-speed transmission
- Gun cart lift
- Hose cart flush-out
- Speed compensation
- Direct speed readout
- All galvanized frame & 4-wheel gun cart
- Non-rusting aluminum elbow entering machine
- Triple gaskets on inlet elbow
- Crossover hose hook-up to either side of machine
- Emergency PTO rewind capability
- Manual hydraulic stabilizer legs
- 20 feet of supply hose
- Ball & socket quick connects
- Fully adjustable gun cart
- Adjustable part circle sprinkler gun
- Direct gear drive system- no chains

OPTIONS

- Watering boom
- Computer and solar panel
- Blow out compressor
- Rewind by engine

DIMENSIONS

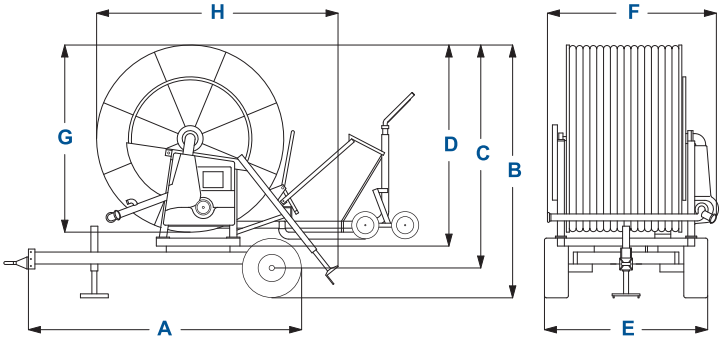

A cm	A. *inch*	B cm.	B *inch*	C cm	C *inch*	D cm	D *inch*
330	*130.0*	296	*116.6*	265	*104.4*	245	*96.5*
E cm	**E *inch***	**F cm**	**F *inch***	**G cm**	**G *inch***	**H cm**	**I *inch***
205	*80.7*	225	*88.6*	224	*88.2*	280	*110.3*

SPECIFICATIONS

- 1148 feet, 3" i.d. hose (90x350)
- Sime-Reflex gun - 24/26/28mm nozzles
- Weight -- 4,250 lbs.
- Turbine Drive

PERFORMANCE SUMMARY

FLOW RATE GPM	INLET PRESS. (psi)	SPRINKLER PRESS. (psi)	WIDTH 80% FT
170	107	65	230
200	118	65	241
237	133	65	252
275	150	65	262

Performance Chart

R2/1 90x350 PERFORMANCE CHART

SPRINKLER		SPRINKLER	RECOMENDED	WATER DELIVERY		IRRIGATED	inch OF RAIN ON IRRIGATED STRIP AND RECOMENDED PRESSURE AT THE MACHINE																	
nozzle		THROW	STRIP 80%	gallon	gallon	AREA	0,4	inch	0,6	inch	0,8	inch	1	inch	1,2	inch	1,4	inch	1,6	inch	2	inch	2,4	inch
	psi	ft/h	ft/h	MIN.	HOUR	ACRES	ft/h	psi	ft/h	psi	ft/h	psi	ft/h	psi	ft/h	psi	ft/h	psi	ft/h	psi	ft/h	psi	ft/h	psi
mm																								
22	44	121	194	138	8.268	5,52	174	66	116	78	87	77	69	75	58	75	50	74	43	74	35	74	29	74
0,9	58	135	215	159	9.567	6,18	181	88	121	99	91	98	72	96	60	96	52	95	45	95	36	95	30	95
inch	65	143	228	169	10.153	6,60	181	98	121	110	91	108	73	107	60	107	52	105	45	105	36	105	30	105
	73	148	236	178	10.708	6,85	185	108	123	120	92	119	74	117	62	117	53	116	46	116	37	116	31	116
	80	156	249	187	11.215	7,28	183	119	122	130	92	129	73	127	61	127	52	126	46	126	37	126	31	126
recommended gear speed							**2.2**		**3.1**		**1.2**		**1.2**		**2.1**		**2.1**		**2.1**		**1.1**		**1.1**	
mm	44	128	205	164	9.868	5,84	197	75	131	86	98	85	79	83	66	83	56	82	49	82	39	82	33	82
24,0	58	144	231	190	11.405	6,68	201	98	134	110	101	108	81	107	67	107	58	105	50	105	40	105	34	105
inch	65	151	241	202	12.102	7,02	204	110	136	121	102	120	82	118	68	118	58	117	51	117	41	117	34	117
0,9	73	157	252	213	12.767	7,36	207	121	138	133	103	132	83	130	69	130	59	129	52	129	41	129	34	129
	80	161	257	223	13.369	7,54	212	133	141	144	106	143	85	141	71	141	61	140	53	140	42	140	35	140
recommended gear speed							**2.2**		**3.1**		**1.2**		**1.2**		**2.1**		**2.1**		**2.1**		**1.1**		**1.1**	
mm	44	135	215	193	11.595	6,18	220	85	146	96	110	95	88	93	73	93	63	92	55	92	44	92	37	92
26,0	58	151	241	223	13.401	7,02	226	111	151	123	113	121	91	120	75	120	65	118	57	118	45	118	38	118
inch	65	157	252	237	14.224	7,36	230	124	153	136	115	134	92	133	77	133	66	132	58	132	46	132	38	132
1,0	73	167	268	250	14.985	7,88	228	137	152	149	114	147	91	146	76	146	65	144	57	144	46	144	38	144
	80	171	273	262	15.713	8,06	235	150	156	162	117	160	94	159	78	159	67	157	59	157	47	157	39	157
recommended gear speed							**2.2**		**3.1**		**1.2**		**1.2**		**2.1**		**2.1**		**2.1**		**2.1**		**1.1**	
mm	44	144	231	224	13.432	6,68	237	97	158	109	119	107	95	106	79	106	68	104	59	104	47	104	40	104
28,0	58	157	252	259	15.539	7,36	251	127	168	139	126	137	101	136	84	136	72	134	63	134	50	134	42	134
inch	65	164	262	275	16.474	7,71	256	142	171	153	128	152	102	150	85	150	73	149	64	149	51	149	43	149
1,1	73	171	273	289	17.361	8,06	259	156	173	168	130	166	104	165	86	165	74	163	65	163	52	163	43	163
recommended gear speed							**2.2**		**3.1**		**3.1**		**3.1**		**2.1**		**2.1**		**2.1**		**2.1**		**1.1**	

These tables are merely indicative because they have been worked out through mathematical formula and according to average working conditions.
Consequently, Ocmis declines any responsibilities deriving from their application.

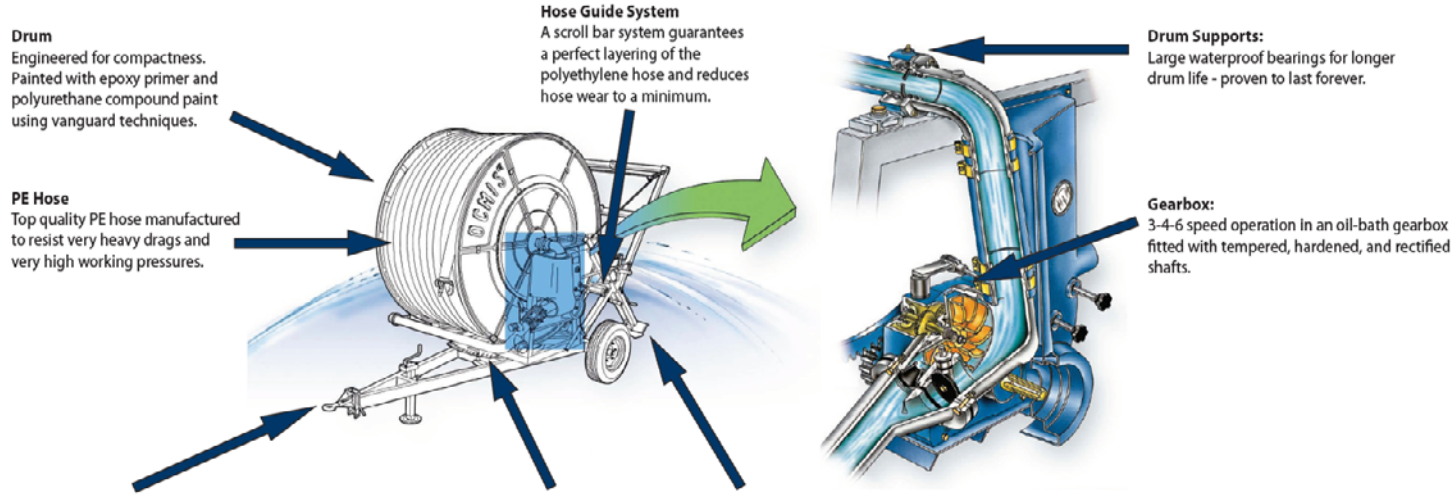

Frame:
The chassis is made of bolted sections, composed of strong steel beams electronically welded by robots and hot dipped galvanized.

Gun Stand:
Gun stand available in 2-wheel, 4-wheel or 5-wheel versions according to model. All have adjustable track. Special versions available to accommodate the most varied work conditions.

Turntables
Turntables are mounted on large diameter bearings for easy rotation.

Stabilizing Legs:
Large hydraulic or mechanical stabilizer legs assure stability to the machine in the toughest working conditions.

Turbine:
Choke-flow turbine, having an outlet perpendicular to the by-passed entry. The turbine impeller is mounted directly to the inlet shaft of the gearbox. This advanced designed system reduces the head losses to give a wider flow range even when the flow and the inlet pressure of the machine are low.